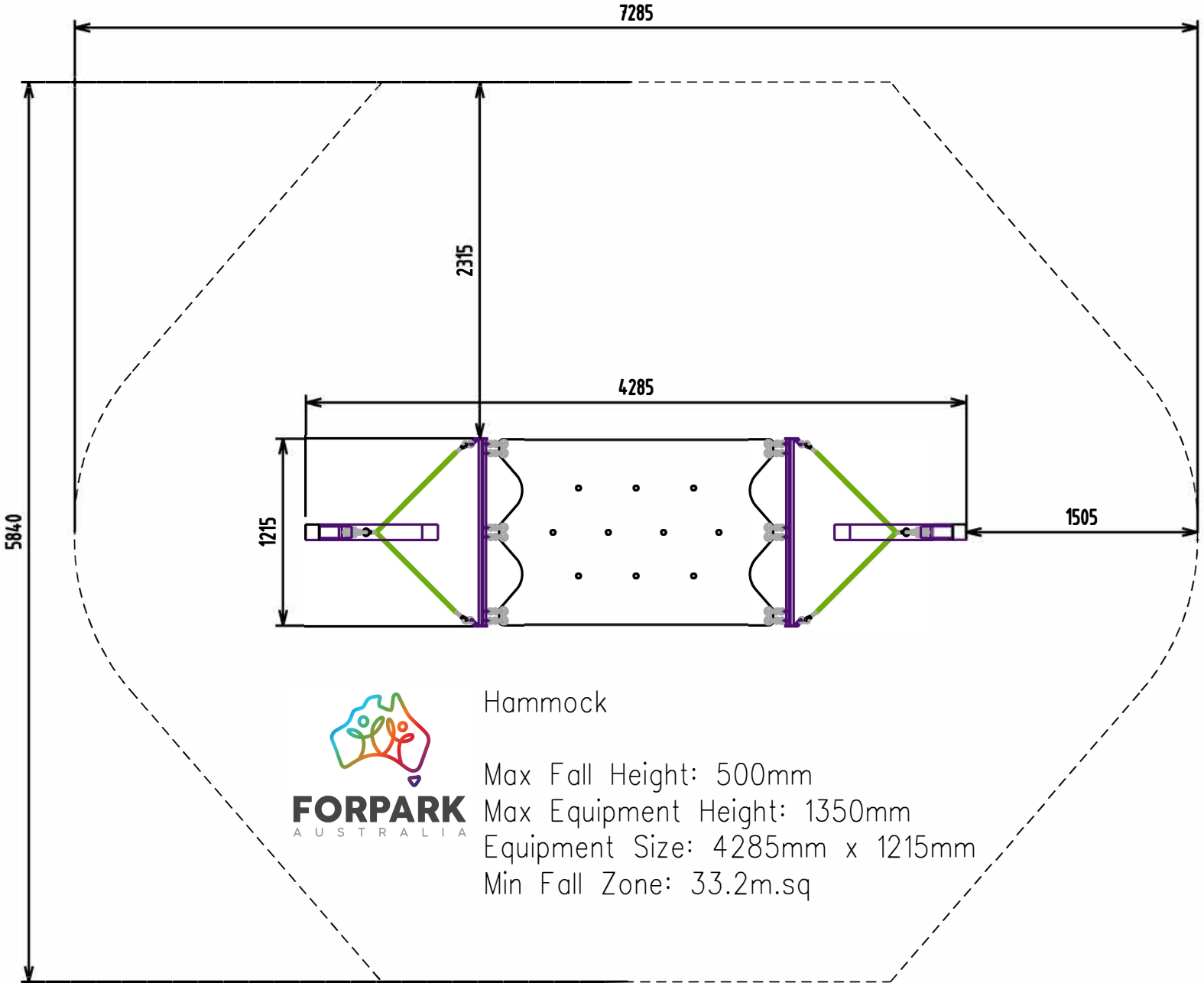

FORPARK
AUSTRALIA

Hammock

Max Fall Height: 500mm
Max Equipment Height: 1350mm
Equipment Size: 4285mm x 1215mm
Min Fall Zone: 33.2m.sq